京东方 BOE

## EP121631-T（12KV/1600A-31.5KA）型固封极柱外形图
EP121631-T（12KV/1600A-31.5KA）Embedded Pole Drawing

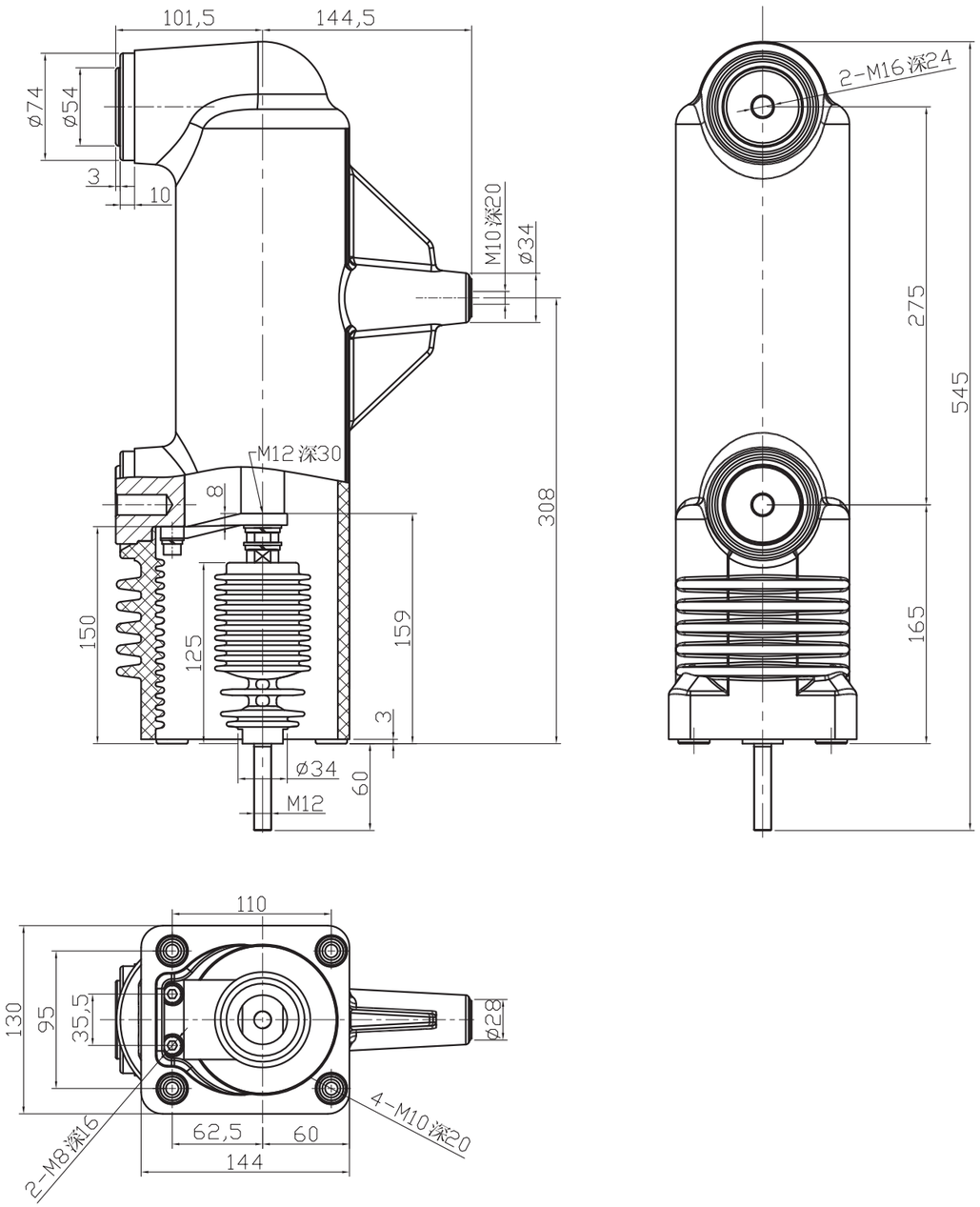


## 固封极柱技术参数
Embedded Pole Technical Specifications



京东方 BOE

## EP121631-T（12KV/1600A-31.5KA）型固封极柱技术参数
EP121631-T（12KV/1600A-31.5KA）Embedded Pole Technical Specifications

| 主要技术参数（断路器用）MAIN TECHNICA DATA（FOR CIRCUIT BREAKER） | |
|---|---|
| 额定电压 Rated voltage | 12KV |
| 额定电流 Rated current | 1600A |
| 额定频率 Rated frequency | 50/60HZ |
| 额定短路开断电流 Rated short-circuit breaking current | 31.5KA |
| 额定短路开断电流开断次数 Operations of short-circuit breaking current interruption | 30次 |
| 最大直流分量 Max.DC-component | 50% |
| 额定短路关合电流 Rated short-circuit making current | 80KA |
| 额定峰值耐受电流 Rated peak withstand current | 80KA |
| 额定短时耐受电流(4秒) Rated short-time withstand current(4s) | 31.5KA |
| 额定单个电容器组开断电流 Rated breaking current of single capacitor bank | #630A |
| 额定背对背电容器开断电流 Rated breaking current of back to back capacitor bank | #400A |
| 局部放电值（1.1Ur）Partial discharge value(with a voltage of 1.1Ur applied) | ≤1pc |
| 短时(1min)工频耐受电压 Short-time(1min) power-frequency withstand voltage | 49KV |
| 雷电冲击耐受电压(峰值) Lightning impulse withstand voltage(peak) | 85KV |
| 额定触头压力下限时的回路电阻 Circuit resistance at minimum added force | ≤18 μΩ |
| 机械寿命 Mechanical life | 30000次 |
| 触头自闭力 Closing force due to bellows and atmosphere | 100±30N |
| 额定开距下的触头反力 Force required to hold contacts open at full stroke | 200±30N |
| 触头允许磨损厚度 Contact erosion limit | 3mm |
| 贮存期 Shelf life | 20年 |
| 质量 Total mass of embedded pole | 12Kg |
| 额定操作顺序 Rated operating sequence | O-0.3s-CO-180s-CO |
| **配套真空开关的机械参数(建议值)MECHANICAL DATA OF SWITCH RECOMMENDATIONS WITH THE INTERRUPTERS** | |
| 触头开距 Rated contact stroke | 9±1mm |
| 触头接触行程 Contact connection stroke | 4±1mm |
| 平均分闸速度（0-6mm行程） Average opening speed（0-6mm stroke） | 1.1±0.2m/s |
| 平均合闸速度（6mm-触头闭合） Average closing speed（6mm-contact making） | 0.6±0.2m/s |
| 触头初压力 Added external contact force at contact touch point | ≥2100N |
| 额定触头压力 Added force on closed contacts | $3100^{+600}_{-200}$ N |
| 触头合闸弹跳时间 Max.bouncing duration | ≤3ms |
| 触头分合闸不同期 Out of simultaneity of contact closing and opening | ≤2ms |
| 分闸触头反弹幅值 Max. rebound distance | ≤2mm |
| 分闸触头过冲幅值 Max. overtravel | ≤2mm |

备注（Note）：
#订货时需与BOV公司协商(Must consult with BOV)；